ISSN No: 2348-4845
International Journal & Magazine of Engineering, Technology, Management and Research
A Peer Reviewed Open Access International Journal

Decoupled Interlinked Dual Voltage Source Inverter with DC-Link Capacitor for PQ Improvement



Ch. Nagendra Babu
M.Tech (Power Systems)
Department of EEE
St. Ann's College of Engineering & Technology,
A.P, India.

M. Naveen Babu
Assistant Professor
Department of EEE
St. Ann's College of Engineering & Technology,
A.P, India.

S.V.D. Anil Kumar
Associate Professor & HoD
Department of EEE
St. Ann's College of Engineering & Technology,
A.P, India.

ABSTRACT

This paper proposes a Interlinked dual voltage source inverter (DVSI) strategy for microgrid system, which enhances the power quality and reliability of the microgrid system. The scheme comprises of two inverters namely the Primary inverter (PVSI) and the Supplementary inverter (SVSI). The DVSI strategy enables the microgrid to exchange power generated by the distributed energy resources (DER) to the loads and in addition to this compensate unbalanced and nonlinear load. he grid connected mode and islanded mode of operations of the DVSI strategy are studied in this paper. Instantaneous symmetrical component theory is made used to generate the reference currents for the inverter. Simulation performance studied in MATLAB/Simulink software.

INRTODUCTION

The technological progress and environmental concernsdrive the power system to a paradigm shift with morerenewable energy sources integrated to the network by meansof distributed generation (DG). These DG units with coordinatedcontrol of local generation and storage facilities form amicro gridan interactive distributed generation (DG) interface for flexible micro-grid operation in the smart distribution system environment. Under the smart grid environment, DG units should be included in the system operational control framework, where they can be used to enhance system reliability by providing backup generation in isolated mode, and to provide ancillary services (e.g. voltage support and reactive power control) in the grid-connected mode. To meet these requirements, the proposed flexible interface utilizes a fixed power-voltage-current cascaded control structure to minimize control function switching and is equipped with robust internal model control structure to maximize the disturbance rejection performance within the DG interface.

The compensator is proposed for use with each individual distributed generation (DG) system in the microgrid and consists of two four-phase-leg inverters (a shunt and a series), optimally controlled to achieve an enhancement of both the quality of power within the microgrid and the quality of currents flowing between the microgrid and the utility system. During utility grid voltage unbalance, the four-phase-leg compensator can compensate for all the unwanted positive-, negative-, and zero-sequence voltage-current components found within the unbalanced utility. Specifically, the shunt four-leg inverter is controlled to ensure balanced voltages within the microgrid and to

ISSN No: 2348-4845
International Journal & Magazine of Engineering, Technology, Management and Research
A Peer Reviewed Open Access International Journal

regulate power sharing among the parallel-connected DG systems. The series inverter is controlled complementarily to inject negative- and zero-sequence voltages in series to balance the line currents, while generating zero real and reactive power. During utility voltage sags, the series inverter can also be controlled using a newly proposed flux-charge current-limiting algorithm to limit the flow of large fault currents between the micro- and utility grids.

It indicates that providing multifunctionalities in a singleinverter degrades either the real power injection or the loadcompensation capabilities.This paper demonstrates a dual voltage source inverter(DVSI) scheme, in which the power generated by the microgridis injected as real power by the primary voltage source inverter(PVSI) and the reactive, harmonic, and unbalanced loadcompensation is performed by Supplementary voltage source inverter(SVSI). This has an advantage that the rated capacity of PVSIcan always be used to inject real power to the grid, if sufficientrenewable power is available at the dc link. In the DVSIscheme, as total load power is supplied by two inverters, powerlosses across the semiconductor switches of each inverter arereduced. This increases its reliability as compared to a singleinverter with multifunctional capabilitiesAs the penetration of renewable energy resources proliferate, inverters have been employed as interface in distributed power systems. To achieve expanded power level and system redundancy, parallel connection of inverters has been widely used.

Interlinked DVSI Strategy

The topology of DVSI scheme is as shown in Fig. 1. It consists of two inverters connected to the point of common coupling (PCC). The system under study considers two set of load, the critical load (CL) and non-critical load (NCL), critical load and non-critical load are both unbalanced and non-linear in nature. The distributed energy source is emulated as a dc voltage source and the dc link of the AVSI utilizes a split capacitor topology, with two capacitors. An LC filter is used to eliminate the high frequency switching components generated by the switching of power electronic switches in the inverters. The transmission lines in the power system will introduce some impedance in the system, which is termed as feeder impedance. The presence of the feeder impedance will make the utility grid weak or non-stiff. The system considered in this study is assumed to have some amount of feeder impedance (Rg, Lg). Circuit breakers CB1and CB2are for islanding and load shedding respectively.

The main inverter will export the power generated by the DERs to the utility grid and the loads connected. The responsibility of the auxiliary inverter is to compensate the harmonics and unbalance in the load current. Since the functionalities of the inverters are different, the inverters are fed by two separate dc links. The control of the inverters is performed using instantaneous symmetrical component theory.

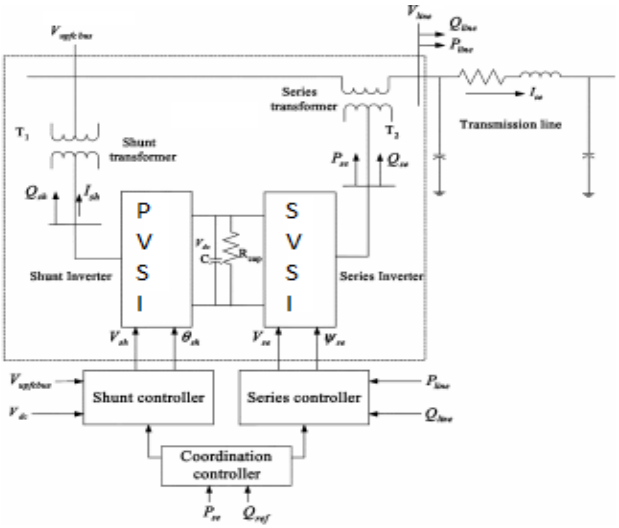

Fig 1: Interlinked DVSI Strategy

Control Strategy for DVSI

SVSI Converter Control Strategy

The shunt converter of the DVSI controls the DVSI bus voltage/shunt reactive power and the dc link capacitor voltage. In this case, the shunt converter voltage is decomposed into two components. One component is in-phase and the other in quadrature with the DVSI bus voltage. De-coupled control system has been employed to

ISSN No: 2348-4845
International Journal & Magazine of Engineering, Technology, Management and Research
A Peer Reviewed Open Access International Journal

achieve simultaneous control of the DVSI bus voltage and the dc link capacitor voltage.

PVSI Converter Control Strategy

The series converter of the DVSI provides simultaneous control of real and reactive power flow in the transmission line. To do so, the series converter injected voltage is decomposed into two components. One component of the series injected voltage is in quadrature and the other in-phase with the DVSI bus voltage. The quadrature injected component controls the transmission line real power flow. This strategy is similar to that of a phase shifter. The in-phase component controls the transmission line reactive power flow. This strategy is similar to that of a tap changer.

Basic Control System

Shunt Converter Control System Fig 2 shows the de-coupled control system for the shunt converter. The D-axis control system controls the dc link capacitor voltage and the Q-axis control system controls the DVSI bus voltage /shunt reactive power. The details of the de-coupled control system design can be found. The de-coupled control system has been designed based on linear control system techniques and it consists of an outer loop control system that sets the reference for the inner control system loop. The inner control system loop tracks the reference.

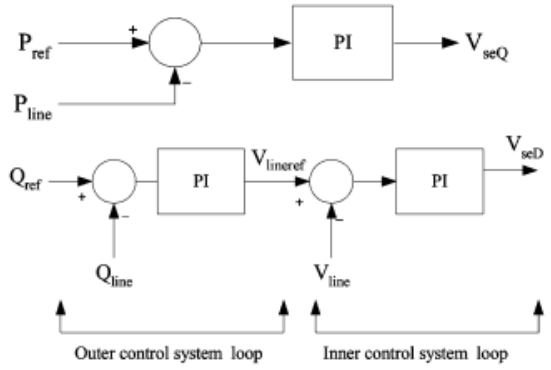

Fig 2: Series converter real and reactive power flow control system

Series Converter Control System

Fig. 2 shows the overall series converter control system. The transmission line real power flow is controlled by injecting a component of the series voltage in quadrature with the DVSI bus voltage. The transmission line reactive power is controlled by modulating the transmission line side bus voltage reference. The transmission line side bus voltage is controlled by injecting a component of the series voltage in-phase with the DVSI bus voltage.

REAL AND REACTIVE POWER COORDINATION CONTROLLER

Real Power Coordination Controller

To understand the design of a real power coordination controller for a DVSI, consider a DVSI connected to a transmission line as shown in Fig. 3. The interaction between the series injected voltage and the transmission line current leads to exchange of real power between the series converter and the transmission line. The real power demand of the series converter causes the dc link capacitor voltage to either increase or decrease depending on the direction of the real power flow from the series converter.

This decrease/increase in dc link capacitor voltage is sensed by the shunt converter controller that controls the dc link capacitor voltage and acts to increase/decrease the shunt converter real power flow to bring the dc link capacitor voltage back to its scheduled value. Alternatively, the real power demand of the series converter is recognized by the shunt converter controller only by the decrease/increase of the dc link capacitor voltage. Thus, the shunt and the series converter operation are in a way separated from each other. To provide for proper coordination between the shunt and the series converter control system, a feedback from the series converter is provided to the shunt converter control system. The feedback signal used is the real power demand of the series converter. The real power demand of the series converter is converted into an equivalent D-axis current for the shunt converter. By doing so, the shunt

ISSN No: 2348-4845
International Journal & Magazine of Engineering, Technology, Management and Research
A Peer Reviewed Open Access International Journal

converter responds immediately to a change in its D-axis current and supplies the necessary series converter real power demand.

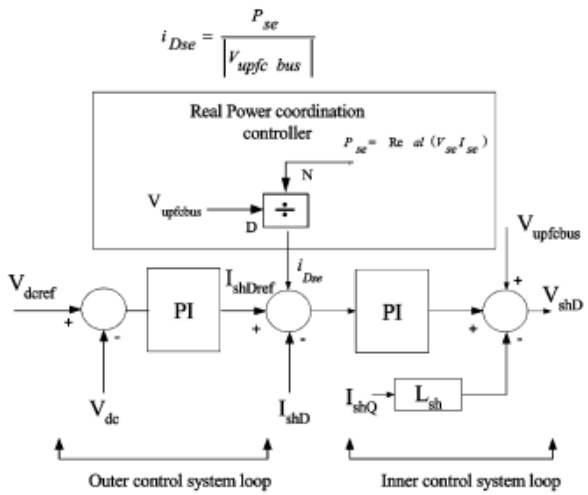

Fig 3: D-axis shunt converter control system with real power coordination controller

Reactive Power Coordination Controller

The in-phase component of the series injected voltage which has the same phase as that of the DVSI bus voltage, has considerable effect on the transmission line reactive power and the shunt converter reactive power . Any increase/decrease in the transmission line reactive power due to in-phase component of the series injected voltage causes an equal increase/decrease in the shunt converter reactive power. In short, increase/decrease in transmission line reactive power is supplied by the shunt converter. Increase/decrease in the transmission line reactive power also has considerable effect on the DVSI bus voltage. The mechanism by which the request for transmission line reactive power flow is supplied by the shunt converter is as follows. Increase in transmission line reactive power reference causes a decrease in DVSI bus voltage. Decrease in DVSI bus voltage is sensed by the shunt converter DVSI bus voltage controller which causes the shunt converter to increase its reactive power output to boost the voltage to its reference value. The increase in shunt converter reactive power output is exactly equal to the increase requested by the transmission line reactive power flow controller (neglecting the series transformer reactive power loss). Similarly, for a decrease in transmission line reactive power, the DVSI bus voltage increases momentarily. The increase in DVSI bus voltage causes the shunt converter to consume reactive power and bring the DVSI bus voltage back to its reference value. The decrease in the shunt converter reactive power is exactly equal to the decrease in transmission line reactive power flow (neglecting the reactive power absorbed by the series transformer. In this process, the DVSI bus voltage experiences excessive voltage excursions.

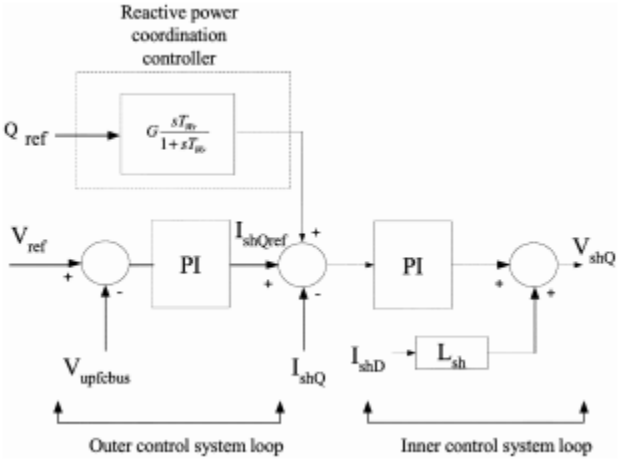

Fig 4: Shunt converter Q-axis controller with reactive power coordination controller.

SIMULATION RESULTS

The performance of the proposed concept of simultaneous load reactive power and voltage sag/swell compensation has been evaluated by simulation. To analyze the performance of DVSI-S, the source is assumed to be pure sinusoidal. Furthermore, for better visualization of results the load is considered as highly inductive. The supply voltage which is available at DVSI terminal is considered as three phase, 60 Hz, 600 V (line to line) with the maximum load power demand of 15 kW + *j* 15 kVAR (load power factor angle of 0.707 lagging).

ISSN No: 2348-4845
International Journal & Magazine of Engineering, Technology, Management and Research
A Peer Reviewed Open Access International Journal

The simulation results for the proposed DVSI-S approach under voltage sag and swell conditions are given in Fig. 5. Before time $t1$, the DVSI-S system is working under steady state condition, compensating the load reactive power using both the inverters. A power angle δ of 21◦ is maintained between the resultant load and actual source voltages. The series inverter shares 1.96 kVAR per phase (or 5.8 kVAR out of 15 kVAR) demanded by the load. Thus, the reactive power support from the shunt inverter is reduced from 15 to 9.2 kVAR by utilizing the concept of PAC. In other words, the shunt inverter rating is reduced by 25% of the total load kilovolt ampere rating. At time $t1$ = 0.6 s, a sag of 20% is introduced on the system (sag last till time t = 0.7 s). Between the time period t = 0.7 s and t = 0.8 s, the system is again in the steady state. A swell of 20% is imposed on the system for a duration of $t2$ = 0.8–0.9 s. The active and reactive power flows through the source, load, and DVSI are given in Fig. 12.

The distinct features of the proposed DVSI-S approach are outlined as follows.

1) From Fig. 11(a) and (b), the load voltage profile is maintained at a desired level irrespective of voltage sag (decrease) or swell (increase) in the source voltage magnitudes. During the sag/swell compensation, as viewed from Fig. 11(f), to maintain the appropriate active power balance in the network, the source current increases during the voltage sag and reduces during swell condition.

2) as illustrated by enlarged results, the power angle δ between the source and load voltages during the steady state [see Fig. 11(e)], and voltage sag [see Fig. 11(i)], and voltage swell [see Fig. 11(j)] is maintained at 213) The DVSI-S controller maintains a self-supporting dc link voltage between two inverters [see Fig. 11(d)]. From Fig. 12(c) and (d), the reactive power supplied by the series inverter during the voltage sag condition increases due to the increased source current. As load reactive power demand is constant, the reactive power supplied by the shunt inverter reduces accordingly. On the other hand, during the voltage swell condition, the reactive power shared by the series inverter reduces and the shunt inverter increases. The reduction and increment in the shunt compensating current magnitude, as seen from Fig. 11(h), also confirm the aforementioned fact. Although the reactive power shared by the series and shunt inverters is varied, the sum of their reactive powers always equals the reactive power demanded by the load.

Thus, the aforementioned simulation study illustrates that with PAC of DVSI-S, the series inverter can compensate the load reactive power and voltage sag/swell simultaneously. The shunt inverter helps the series inverter to achieve the desired performance by maintaining a constant self-supporting dc bus. The significant advantage of DVSI-S over general DVSI applicationsis that the shunt inverter rating can be reduced due toreactive power sharing of both the inverters.Table I gives the power losses associated with DVSI with andwithout PAC approach under different scenarios. The power lossis computed as the ratio of losses associated with DVSI to thetotal load power. Initially, it is considered that the shunt inverteralone supports the load reactive power and the series inverteris assumed to be in OFF condition.

The series injection transformeris also short circuited. This operating condition gives thelosses in the shunt part of DVSI, which are found as 0.74% ofthe rated load power. In the second condition, the series inverteris turned on as well. The percent power losses, when both theinverters of DVSI are in operation, are noticed as 1.7%. Underthis condition when DVSI is controlled as DVSI-S to supportthe load reactive power using both shunt and series inverters,controlled by the PAC approach, losses are observed as 1.2%.The power loss in the DVSI system with PAC approach thusis lower than the normal DVSI control. This is an interesting outcome of the PAC approach even when the series inverterdeals with both active and reactive powers due to δ shift betweensource and load voltages.

ISSN No: 2348-4845
International Journal & Magazine of Engineering, Technology, Management and Research
A Peer Reviewed Open Access International Journal

One may expect to increasethe power loss with the DVSI-S system.

The reduction in thepower loss is mainly due to the reduction in the shunt inverterrms current from 20.20 A (without PAC approach) to 13.18 Awith PAC approach). Second, the current through the seriesinverter (which is almost equal to the source current) remainsunchanged. Similarly from the Table I, the power losses utilizingthe PAC approach, during voltage sag and swell conditions, areobserved lower than those without PAC approach. This studythus suggests that the PAC approach may also help to reducethe power loss associated with DVSI system in addition to thepreviously discussed advantages.

Performances of the proposed DVSI-S approach under voltage sag and swell conditions

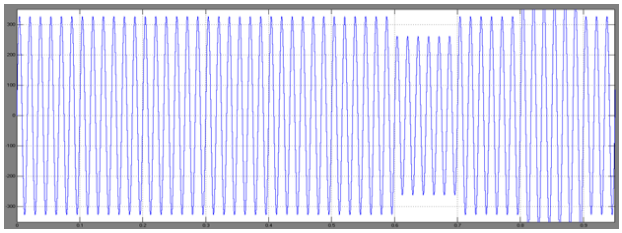

Figure 5(a): Supply voltage

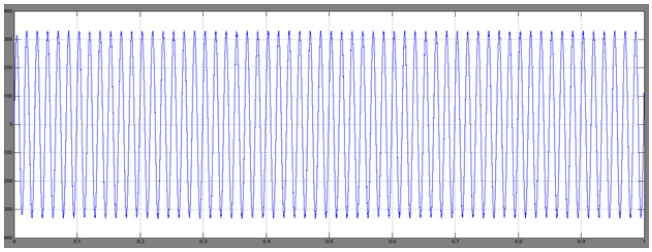

Figure 5(b): Load Voltage

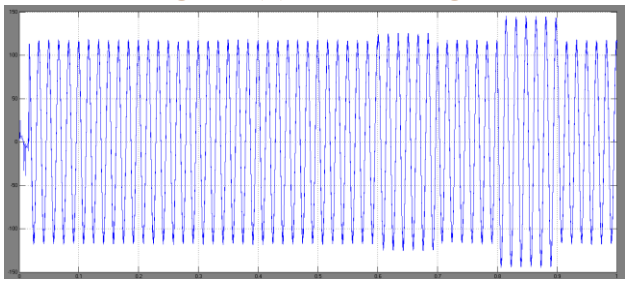

Figure 5(c):PVSI Injected Voltage

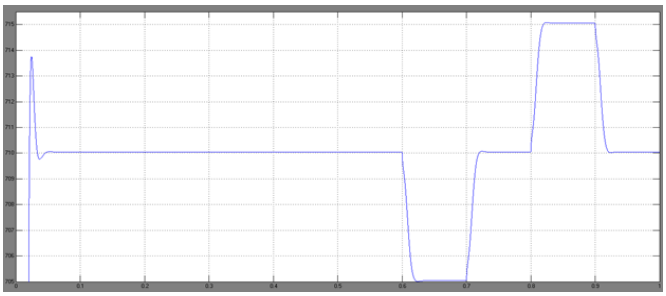

Figure 5(d): Dc Link Voltage

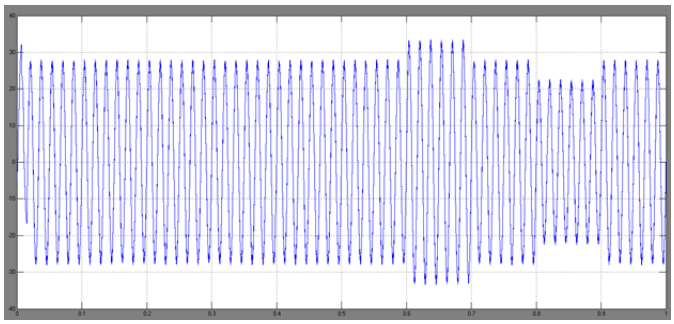

Figure 5(e): Supply current

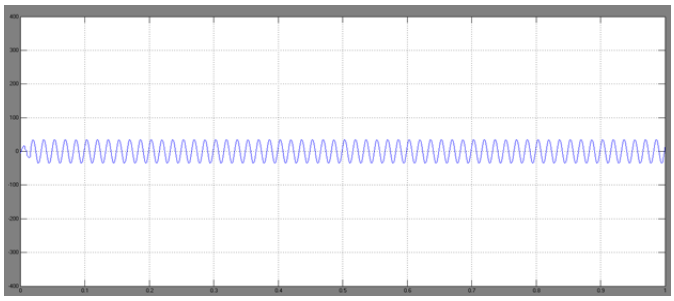

Figure 5(f): Load Current

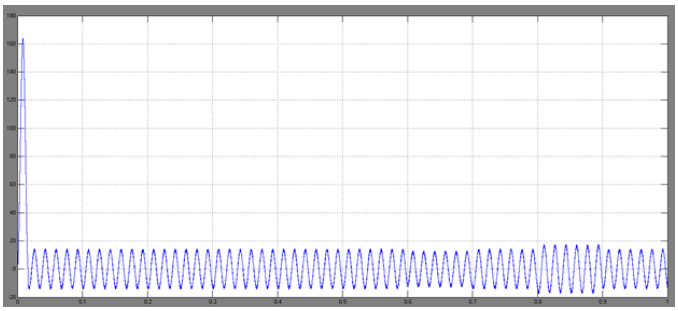

Figure 5(g): SVSI inverter injected current

ISSN No: 2348-4845
International Journal & Magazine of Engineering, Technology, Management and Research
A Peer Reviewed Open Access International Journal

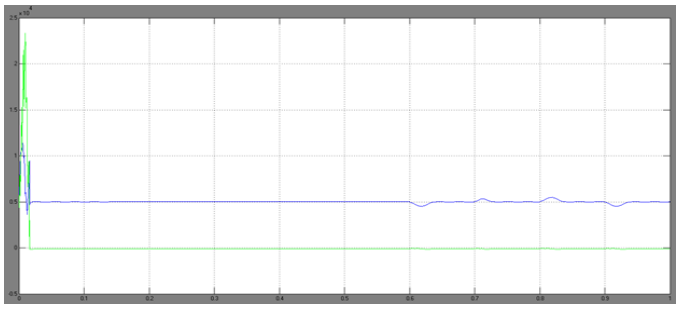

Figure 6 (a): Source Active and Reactive power

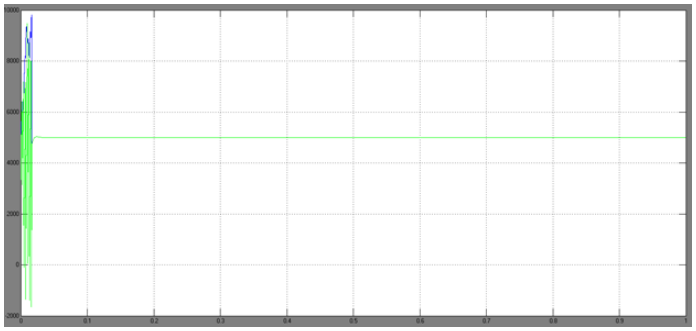

Figure 6 (b): Load Active and Reactive power

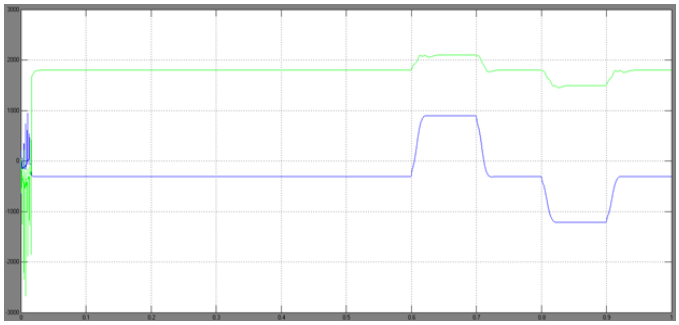

Figure 6 (c): PVSI Active and Reactive power

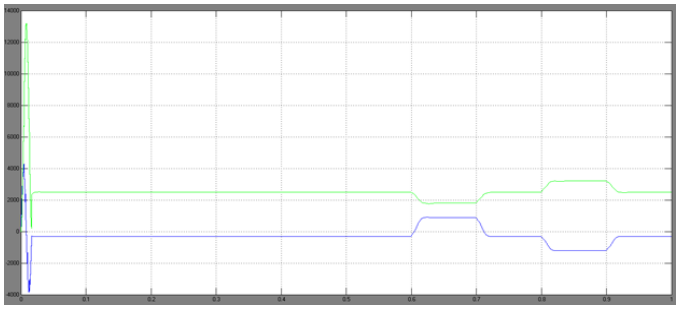

Figure 6 (d): SVSI Active and Reactive power

CONCLUSION

A DVSI scheme is proposed for microgrid systems with enhanced power quality. Control algorithms are developed to generate reference currents for DVSI using ISCT. The proposed scheme has the capability to exchange power from distributed generators (DGs) and also to compensate the local unbalance and nonlinear load. The performance of the proposed scheme has been validated through simulation and experimental studies. As compared to a single inverter with multifunctional capabilities, a DVSI has many advantages such as, increased reliability, lower cost due to the reduction in filter size, and more utilization of inverter capacity to inject real power from DGs to microgrid. Moreover, the use of three-phase, threewire topology for the main inverter reduces the dc-link voltage requirement. Thus, a DVSI scheme is a suitable interfacing option for microgrid supplying sensitive loads.

In this paper, a new concept of controlling complex power (simultaneous active and reactive powers) through series inverter of DVSI is introduced and named as DVSI-S. The proposed concept of the DVSI-S approach is mathematically formulated and analyzed for voltage sag and swell conditions. The developed comprehensive equations for DVSI-S can be utilized to estimate the required series injection voltage and the shunt compensating current profiles (magnitude and phase angle), and the overall VA loading both under voltage sag and swell conditions.

REFERENCES

[1] A. Kahrobaeian and Y.-R. Mohamed, “Interactive distributed generationinterface for flexible micro-grid operation in smart distribution systems,”IEEE Trans. Sustain. Energy, vol. 3, no. 2, pp. 295–305, Apr. 2012.

[2] N. R. Tummuru, M. K. Mishra, and S. Srinivas, “Multifunctional VSCcontrolled microgrid using instantaneous symmetrical components theory,”IEEE

ISSN No: 2348-4845
International Journal & Magazine of Engineering, Technology, Management and Research
A Peer Reviewed Open Access International Journal

Trans. Sustain. Energy, vol. 5, no. 1, pp. 313–322, Jan.2014.

[3] Y. Zhang, N. Gatsis, and G. Giannakis, "Robust energy managementfor microgrids with high-penetration renewables," IEEE Trans. Sustain.Energy, vol. 4, no. 4, pp. 944–953, Oct. 2013.

[4] R. Majumder, A. Ghosh, G. Ledwich, and F. Zare, "Load sharingand power quality enhanced operation of a distributed microgrid," IETRenewable Power Gener., vol. 3, no. 2, pp. 109–119, Jun. 2009.

[5] J. Guerrero, P. C. Loh, T.-L. Lee, and M. Chandorkar, "Advanced controlarchitectures for intelligent microgrids—Part II: Power quality, energystorage, and ac/dc microgrids," IEEE Trans. Ind. Electron., vol. 60, no. 4,pp. 1263–1270, Dec. 2013.

[6] Y. Li, D. Vilathgamuwa, and P. C. Loh, "Microgrid power qualityenhancement using a three-phase four-wire grid-interfacing compensator,"IEEE Trans. Ind. Appl., vol. 41, no. 6, pp. 1707–1719, Nov. 2005.

[7] M. Schonardie, R. Coelho, R. Schweitzer, and D. Martins, "Control ofthe active and reactive power using dq0 transformation in a three-phasegrid-connected PV system," in Proc. IEEE Int. Symp. Ind. Electron., May2012, pp. 264–269.

[8] R. S. Bajpai and R. Gupta, "Voltage and power flow control of gridconnected wind generation system using DSTATCOM," in Proc. IEEEPower Energy Soc. Gen. Meeting—Convers Del. Elect. Energy 21st Century, Jul. 2008, pp. 1–6.

[9] M. Singh, V. Khadkikar, A. Chandra, and R. Varma, "Grid interconnectionof renewable energy sources at the distribution level withpower-quality improvement features," IEEE Trans. Power Del., vol. 26,no. 1, pp. 307–315, Jan. 2011.

[10] H.-G. Yeh, D. Gayme, and S. Low, "Adaptive VAR control for distributioncircuits with photovoltaic generators," IEEE Trans. Power Syst.,vol. 27, no. 3, pp. 1656–1663, Aug. 2012.