ISSN No: 2348-4845
International Journal & Magazine of Engineering, Technology, Management and Research
A Peer Reviewed Open Access International Journal

Performance Evaluation of Dynamic Voltage Restorer Under Power Quality Problems

Bolloju Shanthi
M.Tech,
Power Electronics,
SRTIST-Nalgonda, Telangana, India.

B.Ravi Kumar
Assistant Professor,
Department of Electrical Engineering,
SRTIST-Nalgonda, Telangana, India.

Abstract:

The most noticeable topic for electrical engineering is power quality in recent year. Power quality problem is an occurrence manifested as a nonstandard voltage, current or frequency. Utility distribution networks, sensitive industrial load and critical commercial operation suffer from various types of outages and service interruption can cost significant financial losses. One of the major problems dealt here is the voltage sag. The voltage sags in the system and restore the load voltage to the pre-fault value. This thesis first gives an introduction to relevant power quality problems for a DVR and power electronics controllers for voltage sag mitigation. Thereafter the operation and elements in DVR is described. In this thesis proposed utilizes the error signal to control the triggering of the switches of an inverter using Sinusoidal Pulse Width Modulation (SPWM) technique.

Key words:
PQ problems, DVR, voltage sag and swell.

I.INTRODUCT:

Electrical energy is the most efficient and popular form of energy and the modern society is heavily dependent on the electric supply. The life cannot be imagined without the supply of electricity. At the same time the quality and continuity of the electric power supplied is also very important for the efficient functioning of the end user equipment. Most of the commercial and industrial loads demand high quality uninterrupted power. Thus maintaining the qualitative power is of utmost important. The quality of the power is affected if there is any deviation in the voltage and frequency values at which the power is being supplied. This affects the performance and life time of the end user equipment [1].Whereas, the continuity of the power supplied is affected by the faults which occur in the power system. So to maintain the continuity of the power being supplied, the faults should be cleared at a faster rate and for this the power system switchgear should be designed to operate without any time lag. The power quality is affected many problems which occur in transmission system and distribution system. Some of them are like- harmonics, transients, sudden switching operations, voltage fluctuations, frequency variations etc [2]. These problems are also responsible in deteriorating the consumer appliances.

In order to enhance the behavior of the power system, these all problems should be eliminated. With the recent advancements in power electronic devices, there are many possibilities to reduce these problems in the power system. One of them is the use of Flexible AC Transmission System (FACTS) devices. The connection of these devices in the power system helps in improving the power quality and reliability. In this project the mitigation of voltage sag using FACTS devices is studied and analyzed. Out of the different methods for voltage sag and swell compensation, the installation of custom power device in distribution system is regarded as the most accomplished one.

The custom Power concept was put forward by N.G. Hingorani in the year 1995. Flexible AC Transmission Systems (FACTS) deals with various power problems in transmission systems like improvement in power transfer capabilities and stability margins, whereas the custom power devices involves the utilization of power electronics controllers in a distribution system and deals with various power quality problems and it make sure that the users get a good quality and trustworthy supply [3].

ISSN No: 2348-4845
International Journal & Magazine of Engineering, Technology, Management and Research
A Peer Reviewed Open Access International Journal

By good quality, it means: low phase unbalance, less flicker in load voltage, less deformation in load voltage due to harmonics, level and extent of overvoltage and under voltage within specific limits and no power interruptions. Some examples of Custom power devices are as follows: Battery Energy Storage System (BESS), Distribution STATic synchronous COMpensator (DSTATCOM), Dynamic Voltage Restorer (DVR), Surge Arrester (SA), and Superconducting Magnetic Energy Storage (SMES), Solid-State Transfer switch (SSTS), Static Var Compensator (SVC), and Uninterruptible Power Supply (UPS) etc [4].

II.POWER QUALITY:

The electric power network has undergone several modifications from the time of itsinvention. The modern electric power network has many challenges that should be met inorder to deliver qualitative power in a reliable manner. There are many factors bothinternal and external that affect the quality and quantity of power that is being delivered.This chapter discusses the different power quality problems, their causes andconsequences [5].The quality of electric power delivered is characterized by two factors namely-"continuity" of supply and the "quality" of voltage. As indicated by IEEE standard 1100,Power Quality is characterized as-"The idea of controlling and establishing the touchy supplies in a manner that is suitablefor the operation of the gear."

Power quality Problems:

There are many reasons by which the power quality is affected. The occurrence ofsuch problems in the power system network is almost indispensable. Therefore, tomaintain the quality of power care must be taken that suitable devices are kept inoperation to prevent the consequences of these problems. Here an overview of differentpower quality problems with their causes and consequences is presented [6].

Interruptions:

It is the failure in the continuity of supply for a period of time. Here the supply signal(voltage or current) may be close to zero. This is defined by IEC (International Electrotechnical Committee) as "lower than 1% of the declared value" and by the IEEE (IEEEStd. 1159:1995) as "lower than 10%".

Based on the time period of the interruption, these are classified into two types.

ShortInterruption:

If the duration for which the interruption occurs is of few mille seconds then it iscalled as short interruption.

Causes:

The causes of these interruptions are:
• Opening of an Automatic Re-closure
• Lightening stroke or Insulation Flash over
Consequences:
• The data storage system gets affected
• There may be malfunction of sensitive devices like-PLC's, ASD's.

Long Interruptions:

If the duration for which the interruption occur is large ranging from few milleseconds to several seconds then it is noticed as long interruption.

Causes:

The causes of these interruptions are:
• Faults in power system network
• Human error
• Improper functioning of protective equipment

Consequences:

This type of interruption leads to the stoppage of power completely for a period of timeuntil the fault is cleared.

Waveform Distortion:

The power system network tries to generate and transmit sinusoidal voltage andcurrent signals. But the sinusoidal nature is not maintained and distortions occur in thesignal.

Frequency Variations:

The electric power network is designed to operate at a specified value (50 Hz) offrequency. The frequency of the framework is identified with the rotational rate of thegenerators in the system.

ISSN No: 2348-4845
International Journal & Magazine of Engineering, Technology, Management and Research
A Peer Reviewed Open Access International Journal

The frequency variations are caused if there is any imbalance inthe supply and demand. Large variations in the frequency are caused due to the failure ofa generator or sudden switching of loads [7].

Transients:

The transients are the momentary changes in voltage and current signals in the powersystem over a short period of time. These transients are categorized into two typesimpulsive,oscillatory. The impulsive transients are unidirectional whereas the oscillatorytransients have swings with rapid change of polarity.

III.Dynamic Voltage Restorer (DVR):

A Dynamic Voltage Restorer is a lately proposed seriesconnected solid state device that injects missing voltagewaveform into the system for regulating the voltage at the loadend. Its location in the distribution system is between supplyand sensitive load. It continuously and quickly regulate theload side voltage in case of any power quality issues likevoltage sag or swell thus preventing any power interruption tothe sensitive load. There are different methodologies andcontrol techniques by which a DVR can be implemented [8].

A. Operating Principle:

The fundamental principle behind DVR operation is that itinjects a voltage waveform through an injection transformerthat is the difference between pre-sag and sagged voltage. Thisis demonstrated in Fig. 1. This is made possible by the supplyof required real/active power from an energy storage devicealong with reactive power. The injection transformer ratio andratings of the energy storage device can put limitations on themaximum injection capability of DVR.

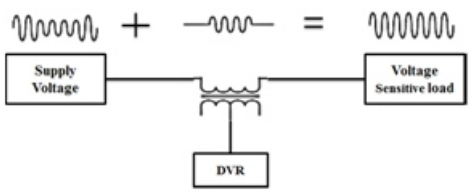

Fig 1: Operation of DVR

Separate control over the magnitude of injected voltage isusually done for a three single phase DVRs.

B. Fundamental Components of DVR:

The fundamental components of DVR are [6]:
1. Injection or Booster transformer
2. Harmonic filter.
3. Voltage Source Inverter (VSI)
4. DC Energy Storage Device and charging circuit.
5. Control system.

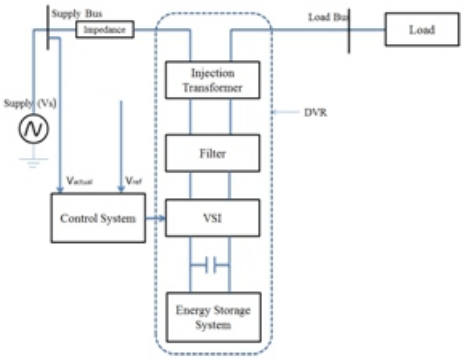

Fig 2: DVR block diagram

C. Equation Related to DVR:

The equivalent circuit of DVR is shown in Fig. 3. Ondetection of any reduction in the supply voltage Vsource from anyset value, the DVR injects a voltage, VDVR, in series through theinjection transformer such that the desired load voltage, Vloadcan be maintained at the load end.

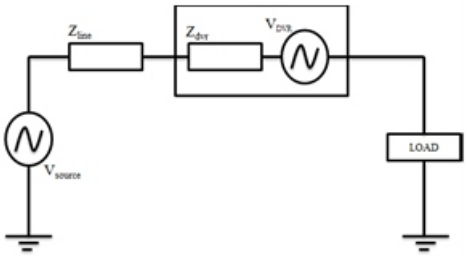

Fig 3: Equivalent circuit of DVR

IV.CONTROL SCHEME:

The principle contemplations for the control of a DVR are- Identification of the starting and completion of the hang, voltage reference era, transient and unfaltering state control of the infused voltage and security of the system [9]. Any control technique implemented to control the DVR should fulfill all the above aspects. The basic idea behind the control strategy is to find the amount by which thesupply voltage is dropped. For this the three phase supply voltage is compared with thereference voltage Vref.

ISSN No: 2348-4845
International Journal & Magazine of Engineering, Technology, Management and Research
A Peer Reviewed Open Access International Journal

If there is voltage sag (or any other voltage imbalance) then anerror occurs. This error voltage is then sent to the PWM generator, which generates thefiring, pulses to the switches of the VSI such that required voltage is generated. Thewhole control strategy can be implemented in 2-ϕ rotating (d-q) coordinate system. Theflow chart of the control technique based on dq0 transformation is shown in Fig 4.The main aim of the control strategy implemented to control a DVR usedfor voltage mitigation is to control the amount of reactive power exchanged between the DVR and the supply bus.

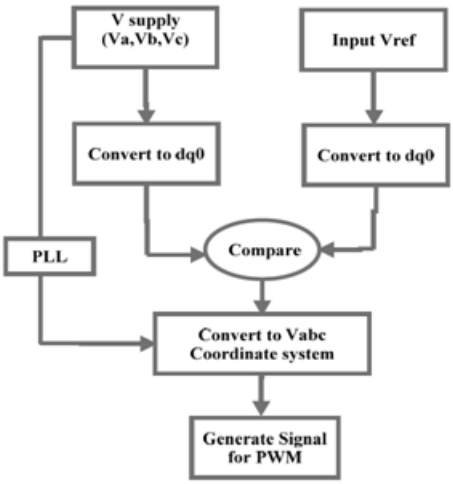

Fig 4: Flowchart of Control Algorithm for DVR

When the PCC voltage is less than the reference (rated) value then the DVR generates reactive power and when PCC voltage is morethan the reference (rated) value then the DVR absorbs reactive power.To achieve the desired characteristics, the firing pulses to PWM VSI are controlled.The actual bus voltage is compared with the reference value and the error is passedthrough a PI controller. The controller generates a signal which is given as an input to thePWM generator. The generator finally generates triggering pulses such that the voltageimbalance is corrected. The block diagram of the control circuit is shown in Fig 5.

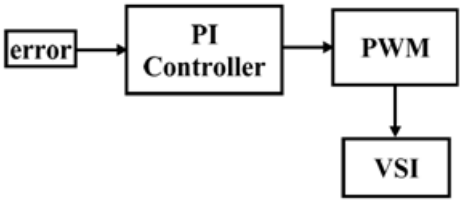

Fig 5: Block Diagram of the Control Circuit of DVR

V.SIMULATION RESULTS:

There are many techniques to mitigate the voltage sag. Among them the best way isto use a device at the point of interest to regulate the voltage. The devices used for thispurpose are already discussed along with their control techniques in the before chapter.These control strategies are simulated in MATLAB SIMULINK. This chapter presentsthe simulation results and makes a comparative study between these devices based ontheir performance.

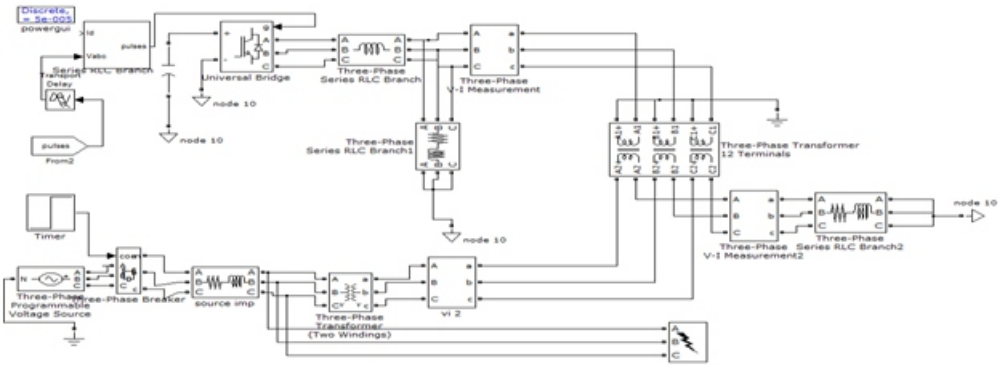

Fig 6: DVR Simulink model

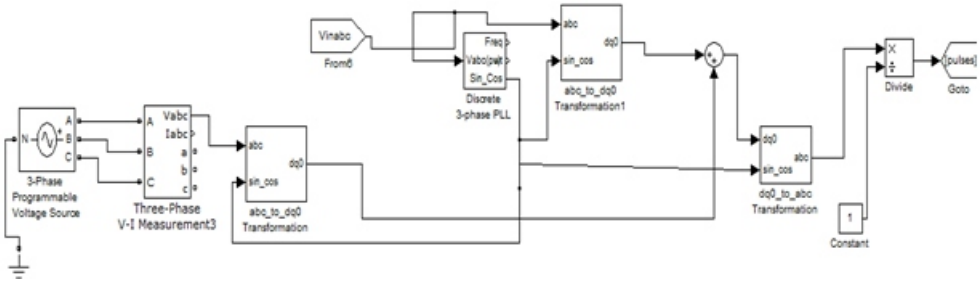

Fig 7: control circuit

ISSN No: 2348-4845
International Journal & Magazine of Engineering, Technology, Management and Research
A Peer Reviewed Open Access International Journal

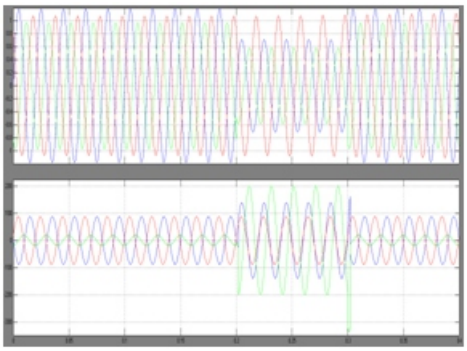

Fig 8: source voltage and DVR voltage during voltage sag.

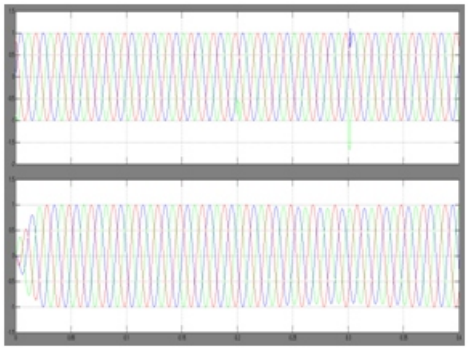

Fig 9: load voltage and load current during voltage sag.

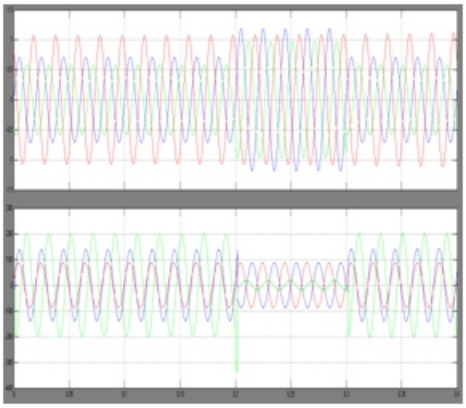

Fig 10: source voltage and DVR voltage during voltage swell

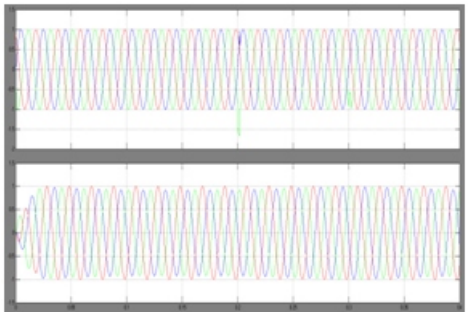

Fig 11: load voltage and load current during voltage swell.

VI.CONCLUSION:

To maintain the quality of power the problems affecting the power quality shouldbe treated efficiently. Among the different power quality problems, voltage sag is one ofthe major one affecting the performance of the end user appliances. In this project themethods to mitigate the voltage sag are presented.In this paper, the modeling and simulation of a DVR withSinusoidal PWM based controller for 3Φ 415V, 50 Hzdistribution system has been developed by usingMatlab/Simulink.

The simulation results show that the DVRcompensates the sag and swell effectively and providesexcellent voltage regulation. The control system implementedhere is based on dqo technique which is a scaled error betweensupply side of the DVR and its set reference value.

REFERENCES:

[1]. Kantaria, R. A.; Joshi, S.K.; Siddhapura, K. R., "A novel technique for mitigationof voltage sag/swell by Dynamic Voltage Restorer (DVR)," Electro/Information-Technology (EIT), 2010 IEEE International Conference on , vol., no., pp.1,4, 20-22 May 2010.

[2]. Kong Shuhong; Yin Zhongdong; Shan Renzhong; Shang Weidong, "A Survey onthe Principle and Control of Dynamic Voltage Restorer," Energy andEnvironment Technology, 2009. ICEET '09. International Conference on , vol.2,no., pp.57,60, 16-18 Oct. 2009.

[3]. Elango, S.; Chandra Sekaran, E., "Mitigation of Voltage Sag by UsingDistribution Static Compensator (D-STATCOM)," Process Automation, Controland Computing (PACC), 2011 International Conference on, vol., no., pp.1,6, 20-22 July 2011.

[4]. Ledwich, G.; Ghosh, A., "A flexible DSTATCOM operating in voltage or currentcontrol mode," Generation, Transmission and Distribution, IEE Proceedings-vol.149, no.2, pp.215,224, Mar 2002.

[5]. Ambarnath Banerji , Sujit K. Biswas , Bhim Singh , "DSTATCOM Applicationfor Mitigation of Voltage Sag Caused by Dynamic Loads in AutonomousSystems" International Journal of Power Electronics and Drive System(IJPEDS), vol.2, No.2, June 2012.

ISSN No: 2348-4845
International Journal & Magazine of Engineering, Technology, Management and Research
A Peer Reviewed Open Access International Journal

[6]. Haque, M. H., "Compensation of distribution system voltage sag by DVR and DSTATCOM,"Power Tech Proceedings, 2001 IEEE Porto , vol.1, no., pp.5 pp.vol.1,, 2001.

[7]. Venkatesh, C.; Reddy, V.P.; Siva Sarma, D.V.S.S., "Mitigation of voltagesags/swells using PWM switched autotransformer," Harmonics and Quality ofPower, 2008. ICHQP 2008. 13th International Conference on , vol., no., pp.1,6,Sept. 28 2008-Oct. 1 2008.

[8]. Bollen, M. H J, "Characteristic of voltage dips (sags) in powersystems," Harmonics and Quality of Power Proceedings, 1998. Proceedings. 8thInternational Conference On , vol.1, no., pp.555,560 vol.1, 14-18 Oct 1998.

[9]. Omar, R.; Rahim, N.A., "Modeling and simulation for voltage sags/swellsmitigation using dynamic voltage restorer (DVR)," Power EngineeringConference, 2008. AUPEC '08. Australasian Universities, vol., no., pp.1,5, 14-17 Dec. 2008.